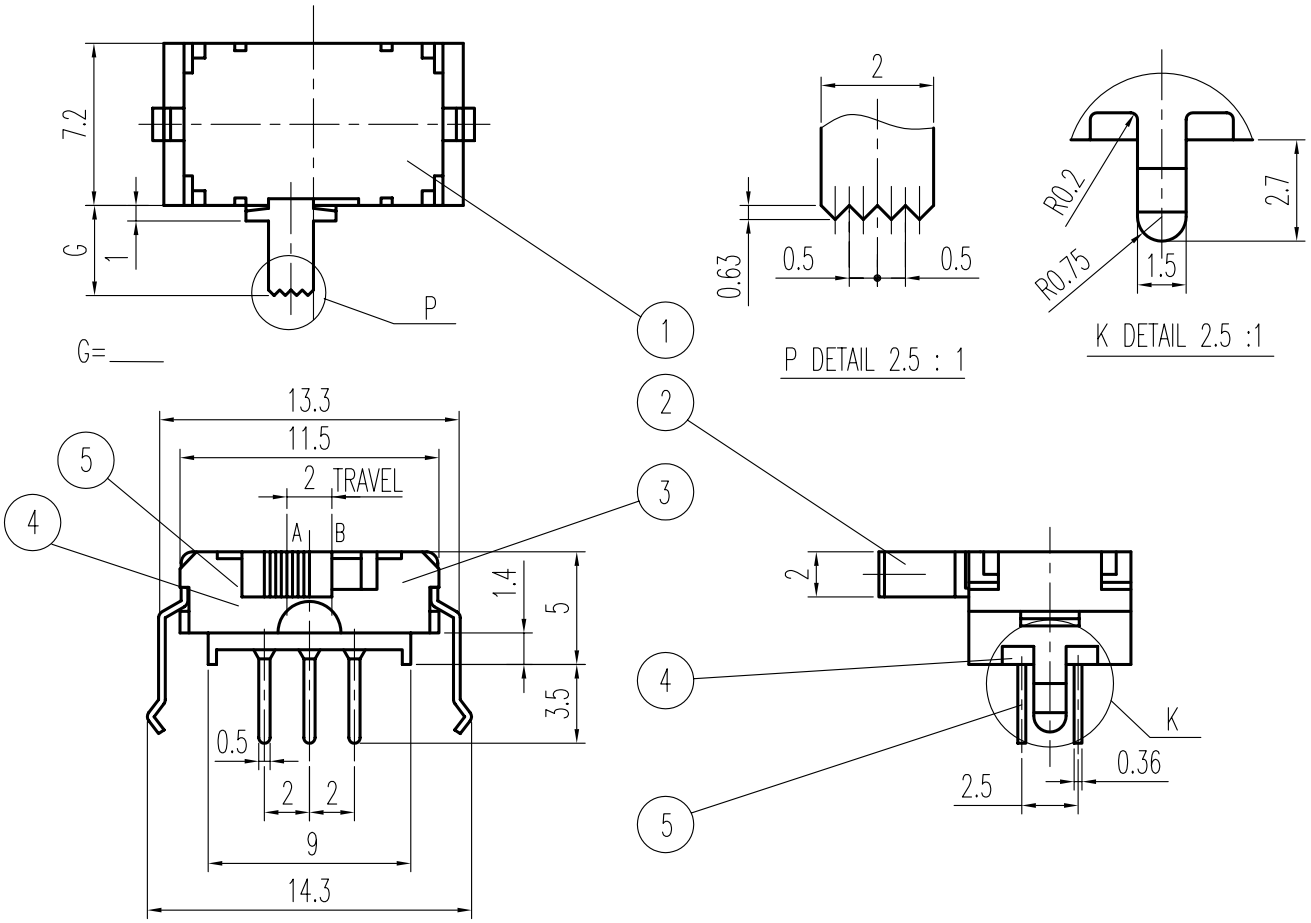

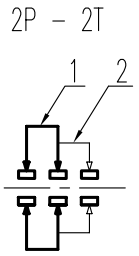

示意图 SCHEMATIC

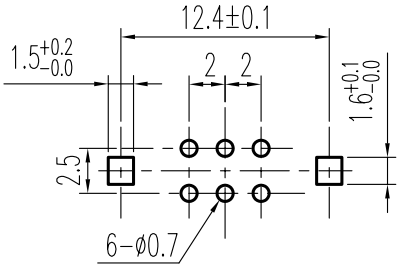

安装孔 PIERCING PLAN

ⓐ

规格 Specifications

额定负荷 Ratings	DC 12 V 0.1 A
初期接触电阻 Initial Contact Resistance	30 mΩ Max.
绝缘电阻 Insulation Resistance	DC 500 V 60 Sec. 100 MΩ Min.
抗电强度 Dielectric Voltage	AC 500 V(50~60HZ) 60 Sec.

操作力 Operationg Force(gf)	A → B B → A 300±150
机械寿命 Operationg Life Without Load	10,000 Cycles

序NO.	零件 PART	材料 MATERIAL	数量QTY	备注 REMARKS
7	端子 TERMINAL	C2680R	6	Ag PLATED
6	基板 TERMINAL BASE	EPOXY RESIN	1	YELLOW
5	弹片 SPRING PLATE	C5210R	2	NATURAL
4	接触片 CONTACT	C5210R	2	Ag CLAD
3	胶壳 HOUSING	P A	1	BLACK
2	胶柄 KNOB	P A	1	G 2 - 7
1	铁壳 FRAME	S P T E	1	NATURAL

标号 REV	内容 DESCRIPTION	签名 SIGN.	日期 DATE
A01	接触阻抗更改为初期接触电阻 见ⓐ 修改材料表栏 见ⓐ	刘红梅	06-07-13
01		吴观江	04/11/13

DWG NO. ITEM2425

TOLERANCES UNLESS OTHERWISE SPEC.	
UNDER 1	± 0.10
1 - 10	± 0.30
OVER 10	± 0.50

TITLE	SIDE KNOB SLIDE SWITCH		ITEM NO	SK-22D31-G		
DRAWN	刘红梅	06-07-13	VERSION	A01	PAGE 1 OF 1	
REVIEWED	张念明	06-07-14	SCALE		UNIT	mm
APPROVED	林高全	06-07-14	PROJECTION			

COMAX ELECTRONICS (HUIZHOU) CO.,LTD.

ED37 版本:A01