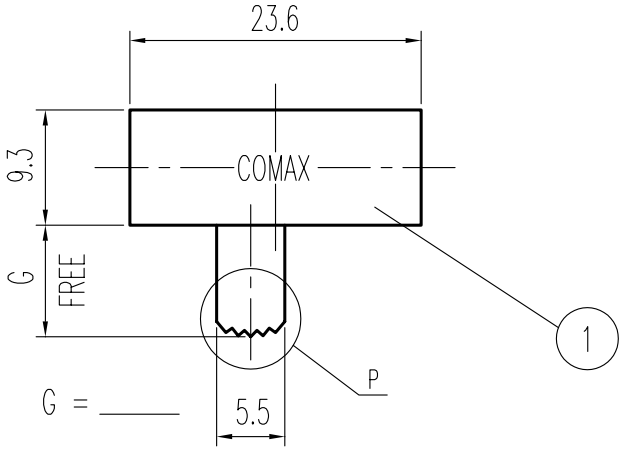


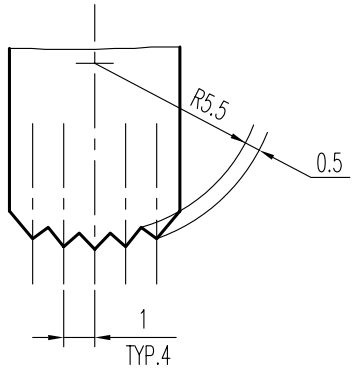


P DETAIL 2 : 1

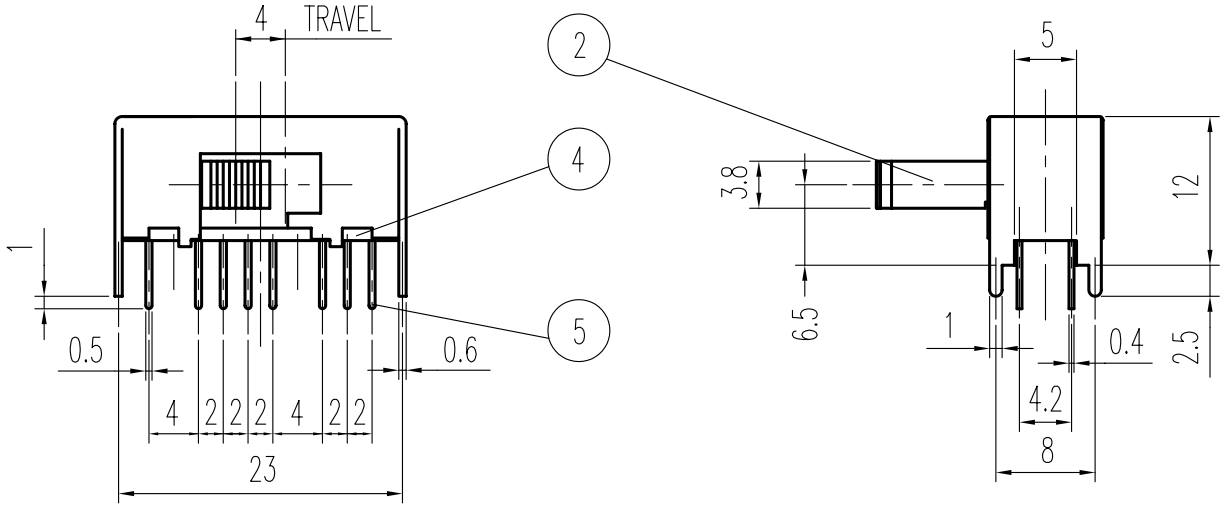


4P - 2T

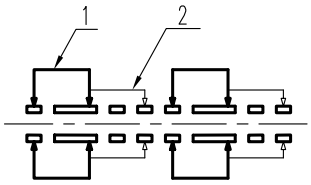


示意图 SCHEMATIC

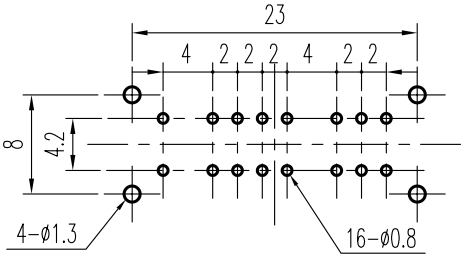


安装孔 PIERCING PLAN

## 规格 Specifications

| | | |
|---|---|---|
| | 额定负荷 Ratings | DC 30 V 0.3 A |
| ⓑ | 初期接触电阻 Initial Contact Resistance | 30 mΩ Max. |
| | 绝缘电阻 Insulation Resistance | DC 500 V 60 Sec. 100 MΩ Min. |
| | 抗电强度 Dielectric Voltage | AC 500 V(50~60HZ) 60 Sec. |

| | | |
|---|---|---|
| | 操作力 Operating Force (gf) | A ⇄ B |
| | | 250±100 |
| ⓑ | 负荷寿命 Operating Life With Load | 10,000 次 Cycles |

| 序NO. | 零件 PART | 材料 MATERIAL | 数量QTY | 备注 REMARKS |
|---|---|---|---|---|
| 7 | 钢珠 STEEL BALL | STEEL | 1 | NATURAL |
| 6 | 弹簧 SPRING | STEEL | 1 | NATURAL |
| 5 | 端子 TERMINAL | C2680R | 16 | Ag PLATED |
| 4 | 基板 TERMINAL BASE | PHENOL RESIN | 1 | YELLOW |
| 3 | 接触片 CONTACT | C5210R | 4 | Ag CLAD |
| 2 | 胶柄 KNOB | P O M | 1 | G 4 - 15 |
| 1 | 铁壳 FRAME | S P C C | 1 | Ni PLATED |

| 标号 REV | 内容 DESCRIPTION | 签名 SIGN. | 日期 DATE |
|---|---|---|---|
| A02 | 机械寿命 ⟶ 负荷寿命 见ⓑ<br>接触阻抗 ⟶ 初期接触电阻 见ⓑ | 王光云 | 06-06-05 |
| A01 | ADD: 规格Specifications 见ⓐ | 王光荣 | 06-2-18 |
| 01 | | 赖立辉 | 14 JUN 92 |

DWG NO. ITEM0524

| TOLERANCES UNLESS OTHERWISE SPEC. | | TITLE | SIDE KNOB SLIDE SWITCH | | ITEM NO | SK-42H01-G | |
|---|---|---|---|---|---|---|---|
| UNDER 1 | ± 0.10 | DRAWN | 王光云 | 06-06-05 | VERSION | A02 | PAGE 1 OF 1 |
| 1 - 10 | ± 0.30 | REVIEWED | 张念明 | 06-06-05 | SCALE | | UNIT mm |
| OVER 10 | ± 0.50 | APPROVED | 高 洪 | 06-06-06 | PROJECTION | | |

COMAX ELECTRONICS (HUIZHOU) CO.,LTD.

ED37 版本:A01